Common Mode Filter Design Guide

Simplifying the Selection of Component Values for Common Mode Filters

Introduction

The selection of component values for common mode filters need not be a difficult and confusing process. The use of standard filter alignments can be utilized to achieve a relatively simple and straightforward design process, though such alignments may readily be modified to utilize pre-defined component values.

General

Line filters prevent excessive noise from being conducted between electronic equipment and the AC line; generally, the emphasis is on protecting the AC line. Figure 1 shows the use of a common mode filter between the AC line (via impedance matching circuitry) and a (noisy) power converter. The direction of common mode noise (noise on both lines occurring simultaneously referred to earth ground) is from the load and into the filter, where the noise common to both lines becomes sufficiently attenuated. The resulting common mode output of the filter onto the AC line (via impedance matching circuitry) is then negligible.

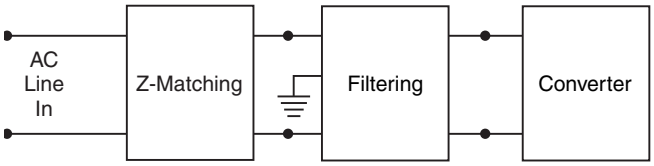

Figure 1. Generalized line filtering

The design of a common mode filter is essentially the design of two identical differential filters, one for each of the two polarity lines with the inductors of each side coupled by a single core:

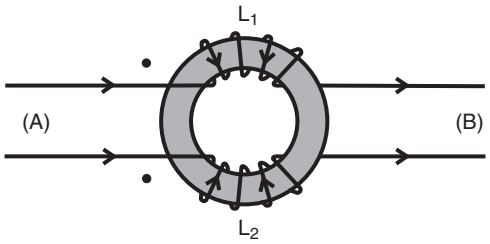

Figure 2. The common mode inductor

For a differential input current (A) to (B) through L1 and (B) to (A) through L2), the net magnetic flux which is coupled between the two inductors is zero.

Any inductance encountered by the differential signal is then the result of imperfect coupling of the two chokes; they perform as independent components with their leakage inductances responding to the differential signal: the leakage inductances attenuate the differential signal.

When the inductors, L1 and L2, encounter an identical signal of the same polarity referred to ground (common mode signal), they each contribute a net, non-zero flux in the shared core; the inductors thus perform as independent components with their mutual inductance responding to the common signal: the mutual inductance then attenuates this common signal.

The First Order Filter

The simplest and least expensive filter to design is a first order filter; this type of filter uses a single reactive component to store certain bands of a spectral energy without passing this energy to the load. In the case of a low pass common mode filter, a common mode choke is the reactive element employed.

The value of inductance required of the choke is simply the load in Ohms divided by the radian frequency at and above which the signal is to be attenuated. For example, attenuation at and above 4000 Hz into a 50 Ω load would require a 1.99 mH (50/(2π x 4000)) inductor. The resulting common mode filter configuration would be as follows:

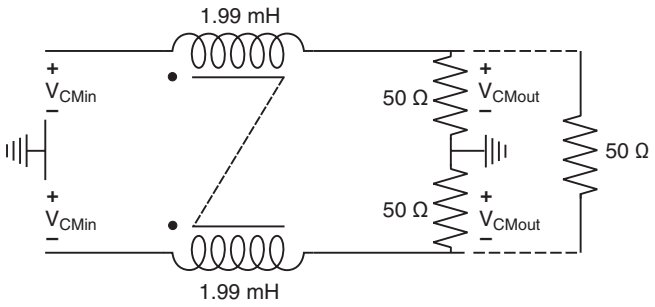

Figure 3. A first order (single pole) common mode filter

The attenuation at 4000 Hz would be 3 dB, increasing at 6 dB per octave. Because of the predominant inductor dependence of a first order filter, the variations of actual choke inductance must be considered. For example, a ±20% variation of rated inductance means that the nominal 3 dB frequency of 4000 Hz could actually be anywhere in the range from 3332 Hz to 4999 Hz. It is typical for the inductance value of a common mode choke to be specified as a minimum requirement, thus insuring that the crossover frequency not be shifted too high. However, some care should be observed in choosing a choke for a first order low pass filter because a much higher than typical or minimum value of inductance may limit the choke's useful band of attenuation.

The Second Order Filters

A second order filter uses two reactive components and has two advantages over the first order filter: 1) ideally, a second order filter provides 12 dB per octave attenuation (four times that of a first order filter) after the cutoff point, and 2) it provides greater attenuation at frequencies above inductor self-resonance (See Figure 4).

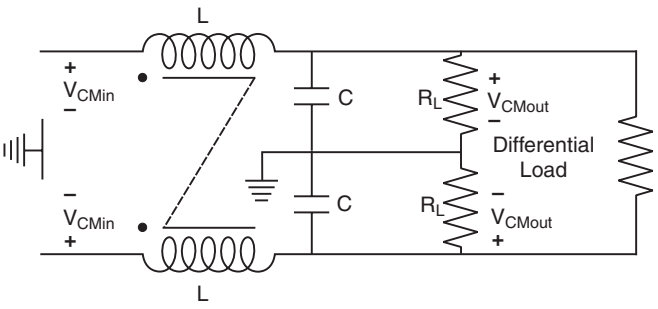

$$\frac{V_{CMout}(s)}{V_{CMin}(s)} = \frac{1}{1+\frac{L}{R_L}s+LCs^2}$$

$$= \frac{1}{1-LC\omega^2+j\omega\left(\frac{L}{R_L}\right)}$$

$$= \frac{1}{1+j2\zeta\frac{\omega}{\omega_n}-\left(\frac{\omega}{\omega_n}\right)^2}$$

$\omega \equiv$ radian frequency

$R_L \equiv$ the noise load resistance

$$\omega_n \equiv \frac{1}{\sqrt{LC}}$$

$$\zeta \equiv \frac{L}{2R_L\sqrt{LC}}$$

Figure 4. Analysis of a second order (two pole) common mode low pass filter

The design of a second order filter requires more care and analysis than a first order filter to obtain a suitable response near the cutoff point, but there is less concern needed at higher frequencies as previously mentioned.

One of the critical factors involved in the operation of higher order filters is the attenuating character at the corner frequency. Assuming tight coupling of the filter components and reasonable coupling of the choke itself (conditions we would expect to achieve), the gain near the cutoff point may be very large (several dB); moreover, the time response would be slow and oscillatory. On the other hand, the gain at the crossover point may also be less than the presumed -3 dB (3 dB attenuation), providing a good transient response, but frequency response near and below the corner frequency could be less than optimally flat.

In the design of a second order filter, the damping factor (usually signified by the Greek letter zeta (ζ)) describes both the gain at the corner frequency and the time response of the filter. Figure (5) shows normalized plots of the gain versus frequency for various values of zeta.

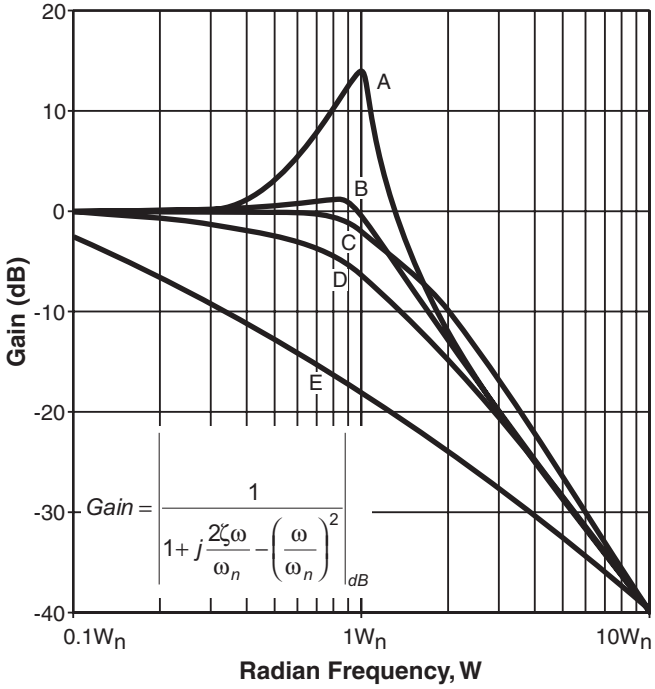

A = ζ = 0.1; **B** = ζ = 0.5; **C** = ζ = 0.707; **D** = ζ = 1.0; **E** = ζ = 4.0

Figure 5. Second order frequency response for various damping factors (ζ)

As the damping factor becomes smaller, the gain at the corner frequency becomes larger; the ideal limit for zero damping would be infinite gain. The inherent parasitics of real components reduce the gain expected from ideal components, but tailoring the frequency response within the few octaves of critical cutoff point is still effectively a

function of ideal filter parameters (i.e., frequency, capacitance, inductance, resistance).

For some types of filters, the design and damping characteristics may need to be maintained to meet specific performance requirements. For many actual line filters, however, a damping factor of approximately 1 or greater and a cutoff frequency within about an octave of the calculated ideal should provide suitable filtering.

The following is an example of a second order low pass filter design:

1. Identify the required cutoff frequency:

For this example, suppose we have a switching power supply (for use in equipment covered by UL478) that is actually 24 dB noisier at 60 KHz than permissible for the intended application. For a second order filter (12 dB/octave roll off) the desired corner frequency would be 15 KHz.

2. Identify the load resistance at the cutoff frequency:

   Assume $R_L = 50\ \Omega$

3. Choose the desired damping factor:

   Choose a minimum of 0.707 which will provide 3 dB attenuation at the corner frequency while providing favorable control over filter ringing.

4. Calculate required component values:

$$\omega_n = 2\pi f_n = 94248 \text{ rad / sec}$$

$$C = \frac{1}{L\omega_n^{\,2}}$$

$$\zeta = 0.707 = \frac{L\omega_n}{2R_L}$$

$$L = 750\mu H$$

5. Choose available components:

   C = 0.05 µF (Largest standard capacitor value that will meet leakage current requirements for UL478/CSA C22.2 No. 1: a 300% decrease from design)

   L = 2.1 mH (Approx. 300% larger than design to compensate for reduction or capacitance: Coilcraft standard part #E3493-A)

6. Calculate actual frequency, damping factor, and attenuation for components chosen:

$$\frac{1}{2\pi\sqrt{LC}} = 15532 \text{ Hz (very nearly 15 KHz)}$$

$\zeta = 2.05$ (a damping factor of about 1 of more is acceptible)

   Attenuation = (12 dB/octave) x 2 octaves = 24 dB

7. The resulting filter is that of figure (4) with:

   L = 2.1 mH; C = 0.05 µF; $R_L = 50\ \Omega$

   Note: Damping factors much greater than 1 may cause unacceptably high attenuation of lower frequencies whereas a damping factor much less than 0.707 may cause undesired ringing and the filter may itself produce noise.

Third Order Filters

A third order filter ideally yields an attenuation of 18 dB per octave above the cutoff point (or cutoff points if the three corner frequencies are not simultaneous); this is the prominently positive aspect of this higher order filter. The primary disadvantage is cost since three reactive components are now required. Higher than third order filters are generally cost-prohibitive.

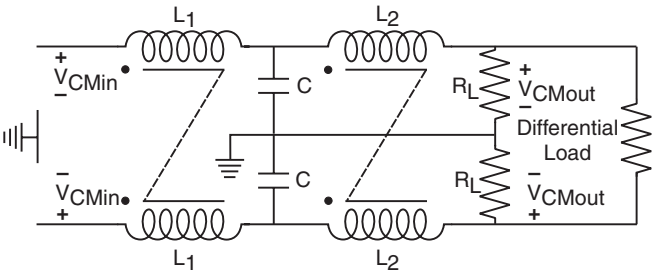

$$\frac{VCMout(s)}{VCMin(s)} = \left(\frac{R_L}{R_L + L_2 s}\right)\left(\frac{\frac{(R_L + L_2 s)}{sC}}{\frac{(R_L + L_2 s)}{sC} + R_L L_1 s + L_2 L_1 s^2 + \frac{L_1 s}{sC}}\right)$$

$$= \frac{1}{1 + \frac{L_1 + L_2}{R_L} s + L_1 C s^2 + \frac{L_1 L_2 C}{R_L} s^3}$$

$$\text{Butterworth} \rightarrow \frac{1}{1 + \frac{2s}{\omega_{n1}} + \frac{2s^2}{\omega_{n2}} + \frac{s^3}{\omega_{n3}}}$$

$$\frac{(L_1 + L_2)}{R_L} = \frac{2}{\omega_{n1}} \ ; \ \omega_{n1} = \frac{2R_L}{(L_1 + L_2)}$$

$$L_1 C = \frac{2}{\omega_{n2}^{\,2}} \ ; \ \omega_{n2} = \frac{1.414}{\sqrt{(L_1 C)}}$$

$$\frac{L_1 L_2 C}{R_L} = \frac{1}{\omega_{n3}^{\,3}} \ ; \ \omega_{n3} = \omega_{n2}^{\,2} \frac{R_L}{2L_2} = \omega_{n2}^{\,2} \omega_{n4}$$

$$\omega_{n4} = \frac{R_L}{2L_2}$$

Figure 6. Analysis of a third order (three pole) low pass filter where ω1, ω2 and ω4 occur at the same -3 dB frequency of ω_0

	First Order	Second Order	Third Order
Filter Schematic	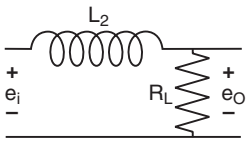	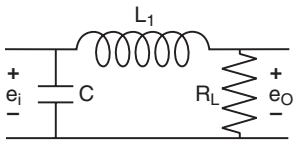	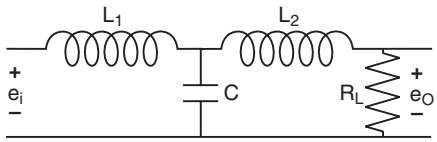
Filter Transfer Function	$\frac{e_o}{e_i} = \frac{1}{\frac{Ls}{R_L}+1}$	$\frac{e_o}{e_i} = \frac{1}{LCs^2+\frac{Ls}{R_L}+1}$	$\frac{e_o}{e_i} = \frac{1}{\frac{L_1L_2}{R_L}s^3+L_1C^{\ 2}+\frac{(L_1+L_2)s}{R_L}+1}$
Butterworth Alignment	$\frac{e_o}{e_i} = \frac{1}{\frac{s}{\omega_n}+1}$	$\frac{e_o}{e_i} = \frac{1}{LCs^2+\frac{Ls}{R_L}+1}$	$\frac{e_o}{e_i} = \frac{1}{\frac{s^3}{\omega_{n3}}+\frac{2s^2}{\omega_{n2}}+\frac{2s}{\omega_{n1}}+1}$

Figure 7. The first three order low pass filters and their Butterworth alignments

The design of a generic filter is readily accomplished by using standard alignments such as the Butterworth ("maximally flat") alignments. Figure (6) shows the general analysis and component relationships to the Butterworth alignments for a third order low pass filter. Butterworth alignments provide an inherent ζ of 0.707 and a -3 dB point at the crossover frequency. The Butterworth alignments for the first three orders of low pass filters are shown in Figure (7).

The design of a line filter need not obey the Butterworth alignments precisely (although such alignments do provide a good basis for design); moreover, because of leakage current limits placed upon electronic equipment (thus limiting the amount of filter capacitance to ground), adjustments to the alignments are usually required, but they can be executed very simply as follows:

1. First design a second order low pass with ζ ≥ 0.5
2. Add a third pole (which has the desired corner frequency) by cascading a second inductor between the second order filter and the noise load:

   $L = R/(2\pi f_c)$

   Where f_c is the desired corner frequency

Design Procedure

The following example determines the required component values for a third order filter (for the same requirements as the previous second order design example).

1. List the desired crossover frequency, load resistance:

   Choose f_c = 15000 Hz

   Choose R_L = 50 Ω
2. Design a second order filter with ζ = 0.5 (see second order example above):
3. Design the third pole:

   $R_L/(2\pi f_c) = L_2$

   $50/(2\pi 15000) = 0.531$ mH
4. Choose available components and check the resulting cutoff frequency and attenuation:

   L_2 = 0.508 mH (Coilcraft #E3506-A)

   $f_n = R/(2\pi L_1) = 15665$ Hz

   Attenuation at 60 KHZ: 24 dB (second order filter) + 2.9 octave × 6 = 41.4 dB
5. The resulting filter configuration is that of figure (6) with:

   L_1 = 2.1 mH

   L_2 = 0.508 mH

   R_L = 50 Ω

Conclusion

Specific filter alignments may be calculated by manipulating the transfer function coefficients (component values) of a filter to achieve a specific damping factor.

A step-by-step design procedure may utilize standard filter alignments, eliminating the need to calculate the damping factor directly for critical filtering. Line filters, with their unique requirements, yet non-critical characteristics, are easily designed using a minimum allowable damping factor.

Standard filter alignments assume ideal filter components; this does not necessarily hold true, especially at higher frequencies. For a discussion of the non-ideal character of common mode filter inductors refer to the application note "Common Mode Filter Inductor Analysis," available from Coilcraft.