SPICE Model – SLC7530

This lumped-element (SPICE) model data simulates the frequency-dependent behavior of Coilcraft power inductors within the frequency range shown in the accompanying table for each individual inductor.

The data represents de-embedded measurements, as described below. Effects due to different customer circuit board traces, board materials, ground planes or interactions with other components are not included and can have a significant effect when comparing the simulation to measurements of the inductors using other production verification instruments and fixtures.

Lumped Element Modeling Method

Measurements were made using a 50 Ohm impedance analyzer. Fixture compensation was performed to remove fixture effects. No DC bias current was applied in any of the measurements. The lumped element values were determined by optimizing the simulation model to an average of the measurements. This method results in a model that represents as closely as possible the typical frequency-dependent behavior of the component within the model frequency range.

The equivalent lumped element model schematics are shown for the SLC7530S and the SLC7530D. Each model should be analyzed only at the input and output ports. Conclusions based on individual lumped element values may be erroneous.

SLC7530S

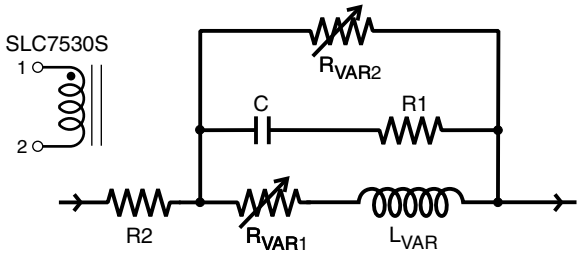

The value of the frequency-dependent variable resistor R_{VAR1} is calculated from:

$$R_{VAR1} = k1 * \sqrt{f}$$

- k1 is shown for each value in the accompanying table.
- f is the frequency in Hz
- R_{VAR1} is the resistance in Ohms

The value of the frequency-dependent variable resistor R_{VAR2} is calculated from:

$$R_{VAR2} = k2 * \sqrt{f}$$

SLC7530D

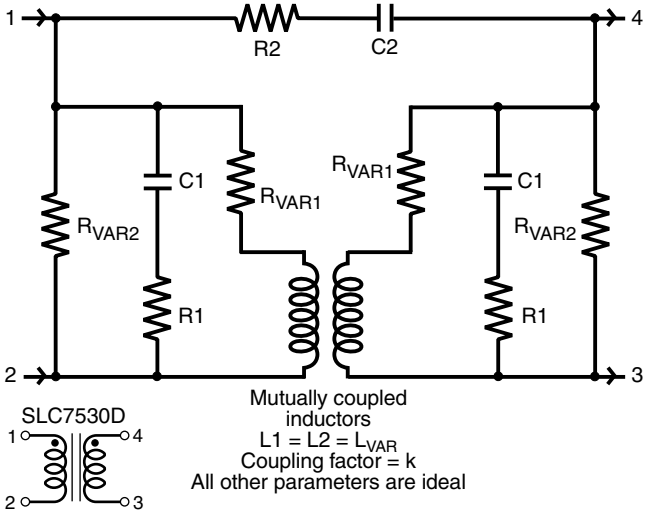

- k2 is shown for each value in the accompanying table.
- f is the frequency in Hz
- R_{VAR2} is the resistance in Ohms

For SLC7530S, the value of the frequency-dependent inductance L_{VAR} is calculated from:

$$L_{VAR} = k3 - k4 * LOG\ (k5 * f)$$

- k3, k4, and k5 are shown in the accompanying table.
- f is the frequency in Hz
- L_{VAR} is the inductance in µH
- LOG is the natural LOG (base e)

For the mutually coupled inductors used for the SLC7530D:

- $L1 = L2 = L_{VAR}$
- k = coupling factor is show in the accompanying table.

Disclaimer

Coilcraft makes every attempt to provide accurate measurement data and software, representative of our components, in a usable format. Coilcraft, however, disclaims all warrants relating to the use of its data and software, whether expressed or implied, including without limitation any implied warranties of merchantability or fitness for a particular purpose. Coilcraft cannot and will not be liable for any special, incidental, consequential, indirect or similar damages occurring with the use of the data and/or software.

1102 Silver Lake Road Cary, Illinois 60013 **Phone** 847/639-6400 **Fax** 847/639-1469
E-mail info@coilcraft.com **Web** http://www.coilcraft.com

© Coilcraft, Inc. 2007

SPICE Model for Coilcraft SLC7530 Power Inductors

SLC7530S

Part number	Frequency limit of model (MHz) Lower	Upper	R1 (Ω)	R2 (mΩ)	C (pF)	k1	k2	L_{VAR} Coefficients k3	k4	k5
SLC7530S-500	0.1	100	26	0.13	120	5.00E-05	0.018	0.050	2.00E-03	7.00E-06
SLC7530S-640	0.1	100	37	0.13	70	6.00E-05	0.007	0.064	1.00E-03	2.00E-06
SLC7530S-820	0.1	100	48	0.13	70	6.00E-05	0.007	0.082	1.00E-03	3.00E-06
SLC7530S-101	0.1	100	50	0.13	40	2.50E-05	0.006	0.100	3.10E-04	1.00E-06

SLC7530D

Part number	Frequency limit of model (MHz) Lower	Upper	R1 (Ω)	R2 (Ω)	C1 (pF)	C2 (pF)	k	k1	k2	L_{VAR} Coefficients k3	k4	k5
SLC7530D-500	0.1	100	92	27	27	6.2	0.780	8.30E-05	0.012	0.050	2.00E-06	1.00E-03
SLC7530D-640	0.1	100	70	38	32	6.2	0.840	4.30E-05	0.015	0.064	2.00E-06	2.70E-03
SLC7530D-820	0.1	100	75	38	43	11.0	0.890	1.70E-05	0.016	0.082	2.00E-06	7.50E-05
SLC7530D-101	0.1	100	80	100	28	10.8	0.930	7.90E-05	0.013	0.100	3.60E-06	2.50E-04

1102 Silver Lake Road Cary, Illinois 60013 **Phone** 847/639-6400 **Fax** 847/639-1469
E-mail info@coilcraft.com **Web** http://www.coilcraft.com

© Coilcraft, Inc. 2007