50/60 Hz Current Sensor CS60-010

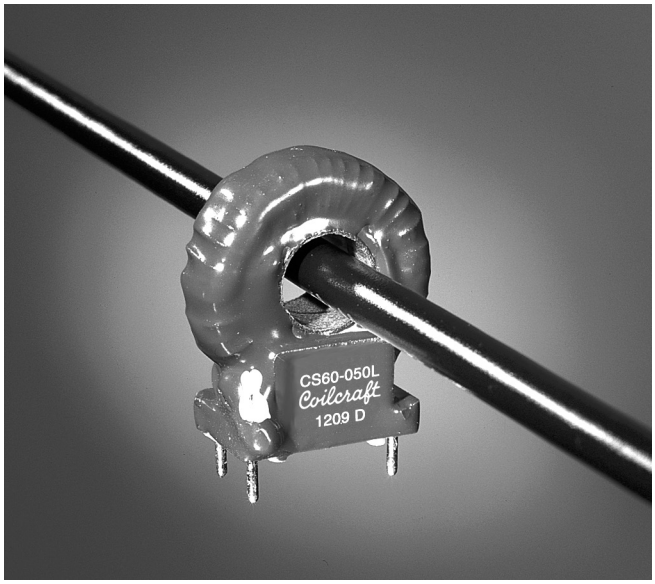

The CS60 series is designed to measure current from 5 to 100 A*rms*. Applications include sensing branch circuit overload and detecting load drop or shutdown. The sensor functions as the encapsulated secondary of a current transformer, while the conductor carrying the current to be measured serves as the "one turn primary." Sensitivity may be enhanced by increasing primary turns.

These parts are mountable on printed circuits and have a third terminal added for mechanical stability.

Samples of these and other current sensors are available for evaluation. To request samples, contact Coilcraft or visit **www.coilcraft.com**.

Part number	Sensed current (I_{rms})	V_{out} tolerance
CS60-050L	5-50 Arms	±10%
CS60-075L	5-75 Arms	±10%
CS60-100L	5-100 Arms	±10%

(For sensed current below 10 Arms, see CS60-010 data sheet)

1. Ambient temperature range –40°C to +85°C.
2. Electrical specifications at 25°C.

Weight 13.8 – 15.4 g
Terminations Tin-silver over copper
Packaging 30 per tray

Typical Response

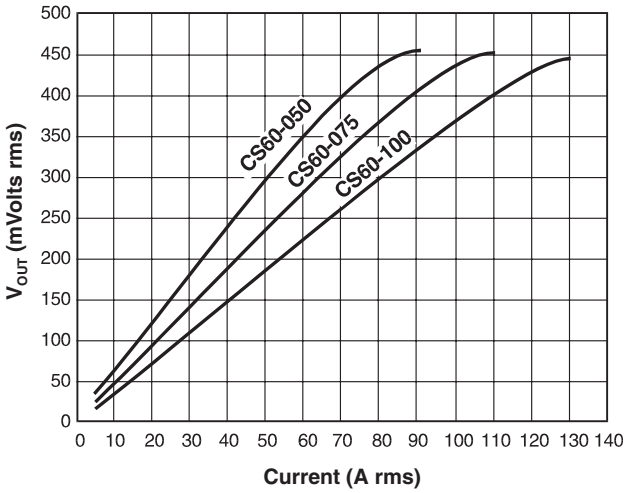

Typical Circuit

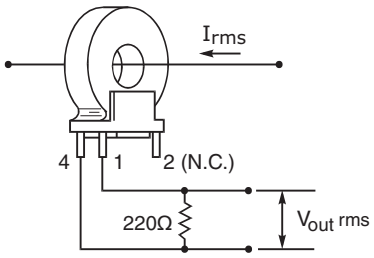

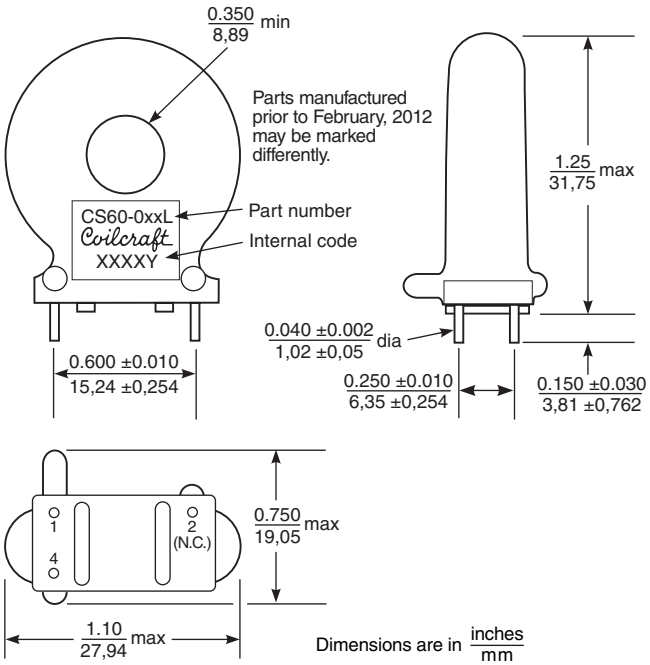

www.coilcraft.com

US +1-847-639-6400 sales@coilcraft.com
UK +44-1236-730595 sales@coilcraft-europe.com
Taiwan +886-2-2264 3646 sales@coilcraft.com.tw
China +86-21-6218 8074 sales@coilcraft.com.cn
Singapore + 65-6484 8412 sales@coilcraft.com.sg

© Coilcraft Inc. 2016
This product may not be used in medical or high risk applications without prior Coilcraft approval. Specification subject to change without notice. Please check web site for latest information.