Selecting Inductors to Drive LEDs

Application Design Example

LED lighting is an exciting and fast growing application. LEDs can provide low cost, reliable lighting for a wide variety of applications ranging from architectural and automotive to signage and handheld devices. The designer faces the challenge of choosing from a vast array of LED manufacturers and device styles. Equally challenging can be the selection of components for the LED driver circuit. Fortunately powerful tools are available that greatly facilitate the power inductor selection.

Since LED applications can use LEDs individually as well as parallel or serial arrays, the driver circuit may need to be a voltage step-up, step-down, or both. The **Coilcraft DC-DC Converter Inductor Selector** tool can be used to select the inductor for all of these driver circuit configurations.

Example 1 – SEPIC Converter for Lithium-Ion Battery, Step-Up/Step-Down

Example 1 demonstrates the selection of coupled inductors for SEPIC converters driving a single white LED. Table 1 lists a sampling of typical white LEDs with forward currents of 350 mA.

These devices can be driven from a single Li-ion battery, the typical power source of handheld devices. It is desired to operate from as wide a voltage range as possible in order to maximize the battery life per charge.

Fsw = 400 kHz
Vin = 2.7 to 4.2 Vdc
Vo = 3.42 Vdc
Io = 350 mA

The challenge with this design is that when fully charged or during charging, the Li-ion cell voltage is greater than the output voltage. Conversely the cell voltage will be less than the desired output during the end of the discharge cycle. Therefore, neither a buck nor boost regulator will be sufficient for this purpose and a topology must be chosen that allows both voltage step-up and step-down. The SEPIC topology, using coupled inductors, is becoming increasingly popular for this purpose. The **Coilcraft DC-DC Converter Inductor Selector** tool can select the inductors for this application.

Table 1. Typical White LEDs

Company	Part Number	Vf	Io	Color	
Avago	ASMT-MW00	3.6	0.35	Cool white	www.avagotech.com
Cree	XRCWHT-L1-0000-00601	3.5	0.35	Cool white	www.cree.com
Everlight	EHP-AX08B/CT01H-P01	3.5	0.35	Cool white	www.everlight.com
Lite-on	LOPL-E011WA	3.8	0.35	white	www.us.liteon.com
Osram	LW-W5SM	3.2	0.35	White	www.osram-os.com
Philips Lumileds	LXK2-PW12-S00	3.42	0.35	White	www.philipslumileds.com
Seoul Semiconductor	W10190	3.5	0.35	Cool white	www.seoulsemicon.com

The inductor selection process begins with choosing the appropriate circuit topology.

The SEPIC topology input screen requests the input/output specifications, the switching frequency and asks the user to select the allowed ripple current.

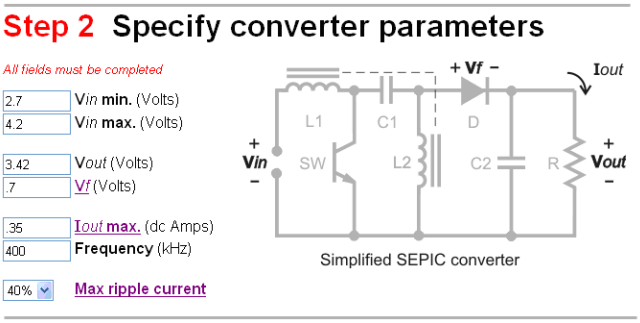

The required inductance and current ratings for each winding of the coupled inductor are then displayed in Step 3.

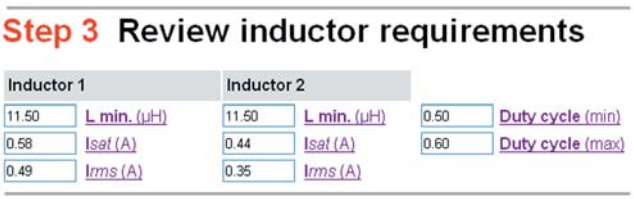

From this information, a list of suitable inductor part numbers is displayed.

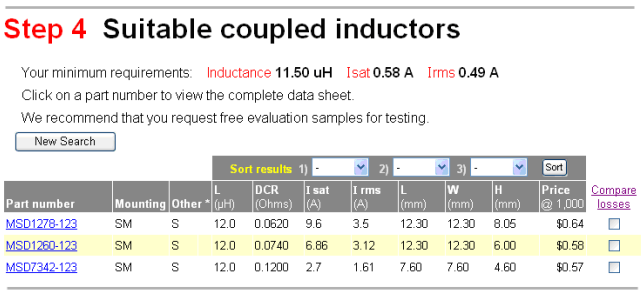

The results shown in Step 4 can be sorted for the parameters of most interest to the user, whether the emphasis is power efficiency, physical size, or cost.

Example 2 – Buck Converter

Example 2 demonstrates the use of the **Coilcraft DC-DC Converter Inductor Selector** tool to select the inductor for a buck regulator to drive a single white LUXEON® K2 LED from Philips Lumileds. Philips Lumileds projects that white LUXEON K2 products will deliver, on average, 70% lumen maintenance at 50,000 hours of operation at a forward current of 1000 mA[1], so let's examine what it takes to drive the LED at 1000 mA.

Assuming a switching frequency of 250 kHz and an input voltage range of 15 to 30 Vdc, drive circuit parameters are:

Fsw = 250 kHz
Vin = 15 to 30 Vdc
Vo = 3.42 Vdc
Io = 1000 mA

This is all the information needed to proceed to the **Coilcraft DC-DC Converter Inductor Selector** tool. The first step is to identify the driver circuit topology.

Step 2 requires input of the operating parameters: Vin, Vout, Iout, switching frequency and the selection of the allowed peak-peak ripple current.

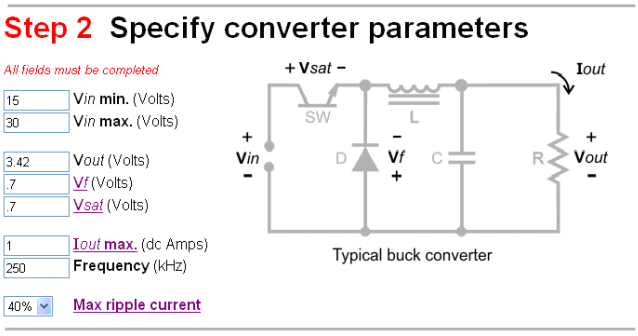

LUXEON® is a registered trademark of Philips Lumileds Lighting Company

[1] LUXEON K2 Datasheet DS51 (6/08) http://www.philipslumileds.com/

Note that the input voltage as well as the output current and voltage are specified as part of the design requirement. The switching frequency may represent some design freedom if a driver IC is not yet selected, but generally the only degree of freedom in selecting the inductor value is the amount of ripple current to be allowed. In this case the design is started assuming a 40% peak-peak current ripple.

From these inputs the **Coilcraft DC-DC Converter Inductor Selector** tool returns in Step 3, the required inductance value, Isat and Irms ratings that the desired inductor must have.

Step 3 Review inductor requirements

35.54	L min. (µH)	Duty cycle	0.14
1.2	Isat (A)	Δ IL peak-peak	0.4 Amps
1	I rms (A)		

From these results the tool searches and finds all Coilcraft inductors that meet the inductance, Isat and Irms criteria.

Step 4 Suitable inductors

Your minimum requirements: Inductance **35.54 uH** Isat **1.20 A** Irms **1.00 A**

Click on a part number to view the complete data sheet.

We recommend that you request free evaluation samples for testing.

New Search

Sort results 1) - 2) - 3) - Sort

Part number	Mounting	Other *	L (µH)	DCR (Ohms)	I sat (A)	I rms (A)	L (mm)	W (mm)	H (mm)	Price @ 1,000	Compare losses
PCH-45-393	Leaded		39.0	0.0250	4.46	4.3	23.80	11.50	11.50	$0.57	☐
MSS1260T-393	SM	S	39.0	0.0580	4.14	2.6	12.30	12.30	6.20	$0.68	☐
MSS1260-393	SM	S	39.0	0.0580	3.8	2.6	12.30	12.30	6.20	$0.53	☐
MSS1278T-393	SM	S	39.0	0.0691	6.28	3.0	12.30	12.30	8.05	$0.72	☐
MSS1278-393	SM	S	39.0	0.0691	5.8	3.0	12.30	12.30	8.05	$0.58	☐
RFB1010-390	Leaded		39.0	0.0750	3.1	3.8	11.00	11.00	11.50	$0.31	
PCH-27-393	Leaded		39.0	0.0850	2.09	1.0	16.51	7.04	7.04	$0.49	☐
RFB0810-390	Leaded		39.0	0.0850	2.2	3.3	9.50	9.50	11.50	$0.27	
DC1012-393	Leaded		39.0	0.0880	2.1	1.8	10.00	10.00	15.20	$0.49	
MSS1246T-393	SM	S	39.0	0.0952	3.72	2.39	12.30	12.30	4.80	$0.65	☐
MSS1246-393	SM	S	39.0	0.0952	3.38	2.39	12.30	12.30	4.80	$0.51	☐
MSS1038-393	SM	S	39.0	0.1120	2.34	2.25	10.50	10.20	4.00	$0.45	☐
DO3316T-393	SM		39.0	0.1200	1.8	1.95	13.21	9.91	6.35	$0.93	
RFB0807-390	Leaded		39.0	0.1600	1.6	2.06	8.80	8.80	7.50	$0.24	

With multiple results, the user may optimize the inductor selection based on criteria specific to the application. The tool allows a quick sort of the results by user selected parameters. For example, for a handheld mobile device or backlight display, component height may be the most important criteria.

Step 4 Suitable inductors

Your minimum requirements: Inductance **35.54 uH** Isat **1.20 A** Irms **1.00 A**

Click on a part number to view the complete data sheet.

We recommend that you request free evaluation samples for testing.

New Search

Sort results 1) Height 2) - 3) - Sort

Part number	Mounting	Other *	L (µH)	DCR (Ohms)	I sat (A)	I rms (A)	L (mm)	W (mm)	H (mm)	Price @ 1,000	Compare losses
MSS1038-393	SM	S	39.0	0.1120	2.34	2.25	10.50	10.20	4.00	$0.45	☐
MSS1246T-393	SM	S	39.0	0.0952	3.72	2.39	12.30	12.30	4.80	$0.65	☐
MSS1246-393	SM	S	39.0	0.0952	3.38	2.39	12.30	12.30	4.80	$0.51	☐
MSS1260T-393	SM	S	39.0	0.0580	4.14	2.6	12.30	12.30	6.20	$0.68	☐
MSS1260-393	SM	S	39.0	0.0580	3.8	2.6	12.30	12.30	6.20	$0.53	☐
DO3316T-393	SM		39.0	0.1200	1.8	1.95	13.21	9.91	6.35	$0.93	
PCH-27-393	Leaded		39.0	0.0850	2.09	1.0	16.51	7.04	7.04	$0.49	☐
RFB0807-390	Leaded		39.0	0.1600	1.6	2.06	8.80	8.80	7.50	$0.24	
MSS1278T-393	SM	S	39.0	0.0691	6.28	3.0	12.30	12.30	8.05	$0.72	☐
MSS1278-393	SM	S	39.0	0.0691	5.8	3.0	12.30	12.30	8.05	$0.58	☐
PCH-45-393	Leaded		39.0	0.0250	4.46	4.3	23.80	11.50	11.50	$0.57	☐
RFB1010-390	Leaded		39.0	0.0750	3.1	3.8	11.00	11.00	11.50	$0.31	
RFB0810-390	Leaded		39.0	0.0850	2.2	3.3	9.50	9.50	11.50	$0.27	
DC1012-393	Leaded		39.0	0.0880	2.1	1.8	10.00	10.00	15.20	$0.49	

If extra margin in the current rating to prevent inductor saturation is preferred, sorting by Isat is recommended.

Step 4 Suitable inductors

Your minimum requirements: Inductance **35.54 uH** Isat **1.20 A** Irms **1.00 A**

Click on a part number to view the complete data sheet.

We recommend that you request free evaluation samples for testing.

New Search

Sort results 1) Isat 2) - 3) - Sort

Part number	Mounting	Other *	L (µH)	DCR (Ohms)	I sat (A)	I rms (A)	L (mm)	W (mm)	H (mm)	Price @ 1,000	Compare losses
MSS1278T-393	SM	S	39.0	0.0691	6.28	3.0	12.30	12.30	8.05	$0.72	☐
MSS1278-393	SM	S	39.0	0.0691	5.8	3.0	12.30	12.30	8.05	$0.58	☐
PCH-45-393	Leaded		39.0	0.0250	4.46	4.3	23.80	11.50	11.50	$0.57	☐
MSS1260T-393	SM	S	39.0	0.0580	4.14	2.6	12.30	12.30	6.20	$0.68	☐
MSS1260-393	SM	S	39.0	0.0580	3.8	2.6	12.30	12.30	6.20	$0.53	☐
MSS1246T-393	SM	S	39.0	0.0952	3.72	2.39	12.30	12.30	4.80	$0.65	☐
MSS1246-393	SM	S	39.0	0.0952	3.38	2.39	12.30	12.30	4.80	$0.51	☐
RFB1010-390	Leaded		39.0	0.0750	3.1	3.8	11.00	11.00	11.50	$0.31	
MSS1038-393	SM	S	39.0	0.1120	2.34	2.25	10.50	10.20	4.00	$0.45	☐
RFB0810-390	Leaded		39.0	0.0850	2.2	3.3	9.50	9.50	11.50	$0.27	
DC1012-393	Leaded		39.0	0.0880	2.1	1.8	10.00	10.00	15.20	$0.49	
PCH-27-393	Leaded		39.0	0.0850	2.09	1.0	16.51	7.04	7.04	$0.49	☐
DO3316T-393	SM		39.0	0.1200	1.8	1.95	13.21	9.91	6.35	$0.93	
RFB0807-390	Leaded		39.0	0.1600	1.6	2.06	8.80	8.80	7.50	$0.24	

The **Coilcraft DC-DC Converter Inductor Selector** tool features the flexibility to help the user optimize the inductor selection based on the criteria most important to that application.

Conclusion

LED lighting is a growing and exciting application area and Coilcraft design tools can guide the designer quickly and easily to inductors best suited to a variety of applications.