Common Mode Line Chokes

Standard Series
High L Series

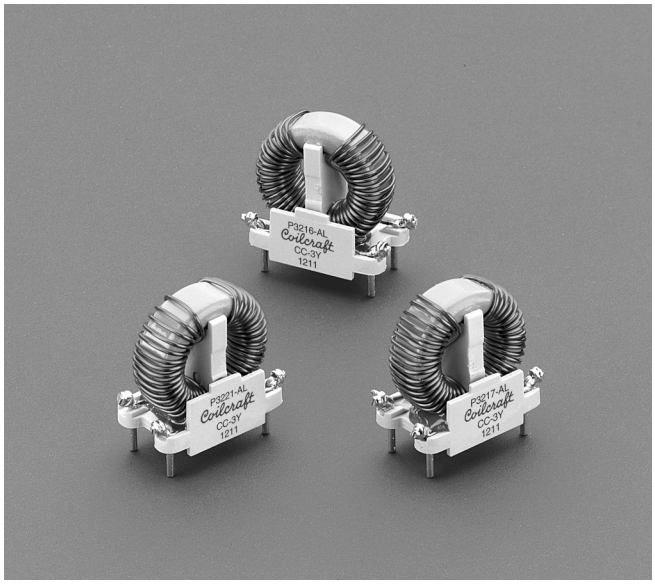

Coilcraft's Toroid Style common mode chokes are designed for optimum performance. Their single layer windings provide for the highest common mode impedance over the widest frequency range.

These common mode line chokes come in two series: Standard and High Inductance. Both are well suitable for switching power supplies operating in the 100-300 kHz range of switching frequencies.

- UL1446 Class B (130°C) Insulation System (UL File E83628)
- Creepage and clearance = 3.2 mm
- 1250 Vrms, one minute isolation between windings

Coilcraft **Designer's Kit P402** contains samples of eight standard EE and toroidal common mode line chokes. To order, please contact Coilcraft or purchase on-line at **buy.coilcraft.com.**

Standard Series

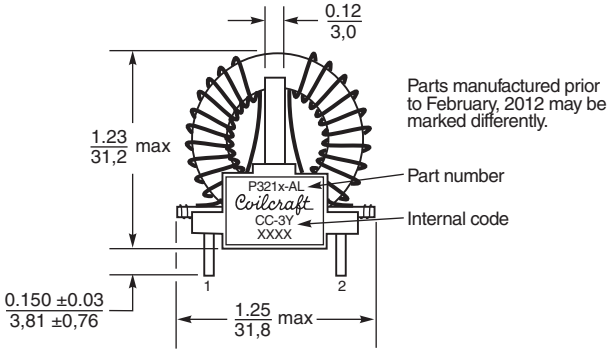

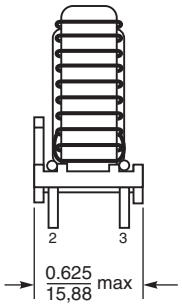

Schematic

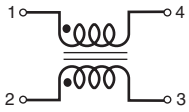

Recommended Board Layout

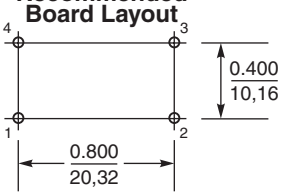

Terminations: Tin-silver over copper; #16 AWG (0.051″/1,29 mm) except P3217-A, which has #18 AWG (0.040″/1,02 mm).

High Inductance Series

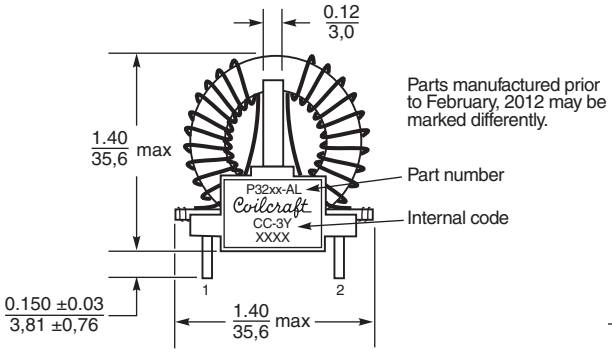

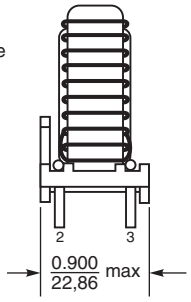

Schematic

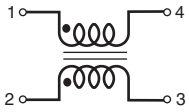

Recommended Board Layout

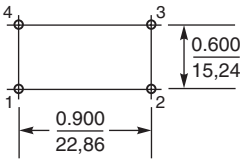

Terminations: Tin-silver over copper; #16 AWG (0.051″/1,29 mm)

Coilcraft
www.coilcraft.com

US +1-847-639-6400 sales@coilcraft.com
UK +44-1236-730595 sales@coilcraft-europe.com
Taiwan +886-2-2264 3646 sales@coilcraft.com.tw
China +86-21-6218 8074 sales@coilcraft.com.cn
Singapore + 65-6484 8412 sales@coilcraft.com.sg

© Coilcraft Inc. 2016
This product may not be used in medical or high risk applications without prior Coilcraft approval. Specification subject to change without notice. Please check web site for latest information.

Standard Series

Part number	Inductance min (mH)	Current rating (Amps)	Leakage inductance max (µH)	SRF typ (kHz)	DCR max (Ohms)	Interwinding isolation (Volts rms)	Lead diameter nom	Weight (g)
P3213-AL	3.5	1.3	62	500	0.150	1250	0.051/1,29	15.8
P3214-AL	1.7	2.0	32	850	0.065	1250	0.051/1,29	16.1
P3215-AL	1.0	3.2	22	1250	0.036	1250	0.051/1,29	16.9
P3216-AL	0.75	5.0	19	1300	0.022	1250	0.051/1,29	17.6
P3217-AL	0.425	8.1	10	1750	0.012	1250	0.040/1,02	18.2
P3218-AL	0.275	13.0	8	2000	0.008	1250	0.051/1,29	19.8

1. All parts have #16 AWG solder coated copper wire leads except P3217-A, which has #18 AWG leads.
2. Operating temperature range –40°C to +85°C.
3. Electrical specifications at 25°C.
4. Parts in bold type are included in Coilcraft Designer's Kit P402.

Shown here are typical common mode frequency plots of each part number. The plots indicate the relative performance of each part over the frequency range of most interest for designers of equipment that must meet FCC and VDE noise regulations. It is important to note that only a common mode signal will be attenuated as shown. Differential mode power such as 50/60 Hz power line currents or data signals will pass through unimpeded by the common mode impedance. The insertion loss for differential signals is shown in the lower graph. These data were taken in a 50 Ohm system. All parts should be tested using an appropriate Line Impedance Stabilization Network (LISN) when testing EMI/RFI performance of off-line power converters.

Common Mode Attenuation*

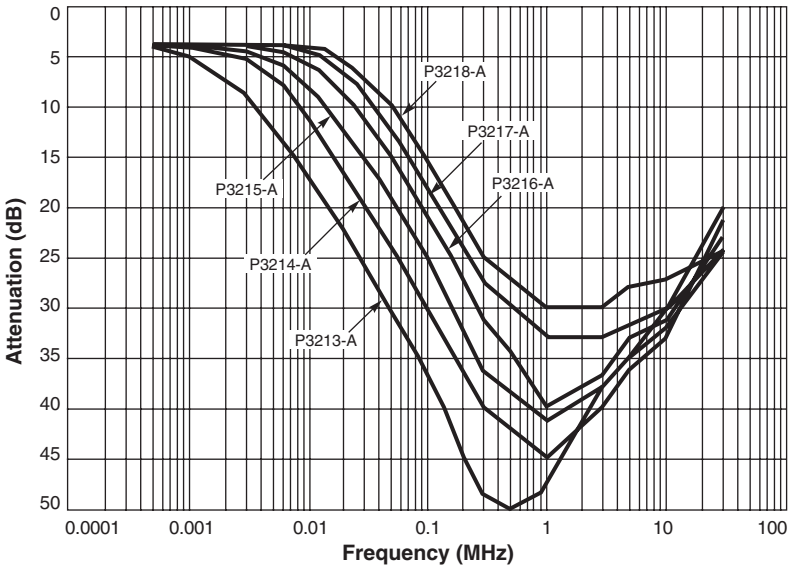

Differential Mode Attenuation*

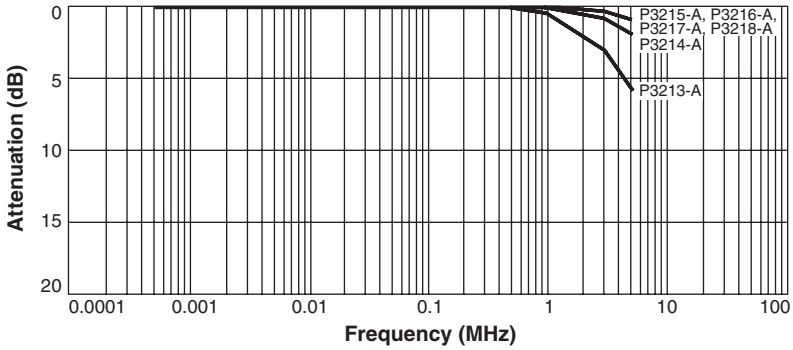

*measured on Agilent/HP 3577A network analyzer.

www.coilcraft.com

US +1-847-639-6400 sales@coilcraft.com
UK +44-1236-730595 sales@coilcraft-europe.com
Taiwan +886-2-2264 3646 sales@coilcraft.com.tw
China +86-21-6218 8074 sales@coilcraft.com.cn
Singapore + 65-6484 8412 sales@coilcraft.com.sg

© Coilcraft Inc. 2016
This product may not be used in medical or high risk applications without prior Coilcraft approval. Specification subject to change without notice. Please check web site for latest information.

High Inductance Series

Part number	Inductance min (mH)	Current rating (Amps)	Leakage inductance max (µH)	SRF typ (kHz)	DCR max (Ohms)	Interwinding isolation (Volts rms)	Lead diameter nom	Weight (g)
P3219-AL	10.8	1.3	165	125	0.29	1250	0.051/1,29	36.0
P3220-AL	7.0	2.0	100	225	0.15	1250	0.051/1,29	38.3
P3221-AL	3.7	3.2	60	400	0.08	1250	0.051/1,29	38.7
P3222-AL	2.2	5.0	35	600	0.04	1250	0.051/1,29	40.4
P3223-AL	1.1	8.1	20	900	0.02	1250	0.040/1,02	40.9
P3224-AL	0.58	13.0	10	1150	0.01	1250	0.051/1,29	40.9

1. All parts have #16 AWG solder coated copper wire leads except P3223-A, which has #18 AWG leads.
2. Operating temperature range –40°C to +85°C.
3. Electrical specifications at 25°C.

Shown here are typical common mode frequency plots of each part number. The plots indicate the relative performance of each part over the frequency range of most interest for designers of equipment that must meet FCC and VDE noise regulations. It is important to note that only a common mode signal will be attenuated as shown. Differential mode power such as 50/60 Hz power line currents or data signals will pass through unimpeded by the common mode impedance. The insertion loss for differential signals is shown in the lower graph. These data were taken in a 50 Ohm system. All parts should be tested using an appropriate Line Impedance Stabilization Network (LISN) when testing EMI/RFI performance of off-line power converters.

Common Mode Attenuation*

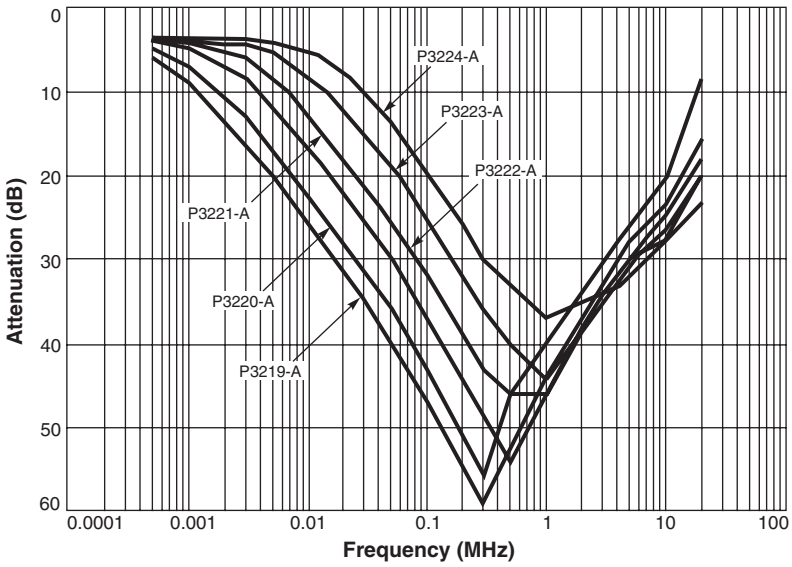

Differential Mode Attenuation*

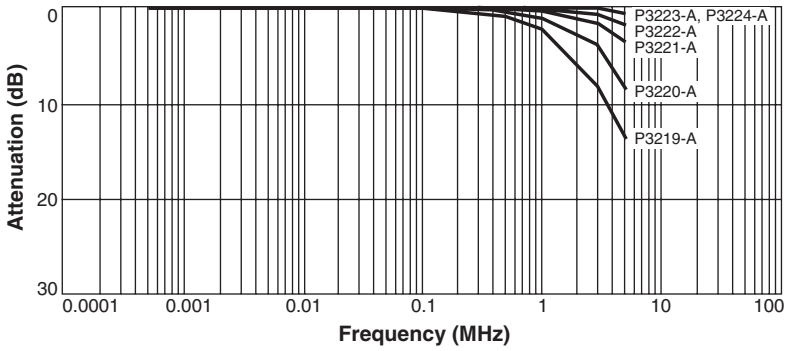

*measured on Agilent/HP 3577A network analyzer.

www.coilcraft.com

US +1-847-639-6400 sales@coilcraft.com
UK +44-1236-730595 sales@coilcraft-europe.com
Taiwan +886-2-2264 3646 sales@coilcraft.com.tw
China +86-21-6218 8074 sales@coilcraft.com.cn
Singapore + 65-6484 8412 sales@coilcraft.com.sg

© Coilcraft Inc. 2016
This product may not be used in medical or high risk applications without prior Coilcraft approval. Specification subject to change without notice. Please check web site for latest information.