Fixed RF Inductors – 132 Series

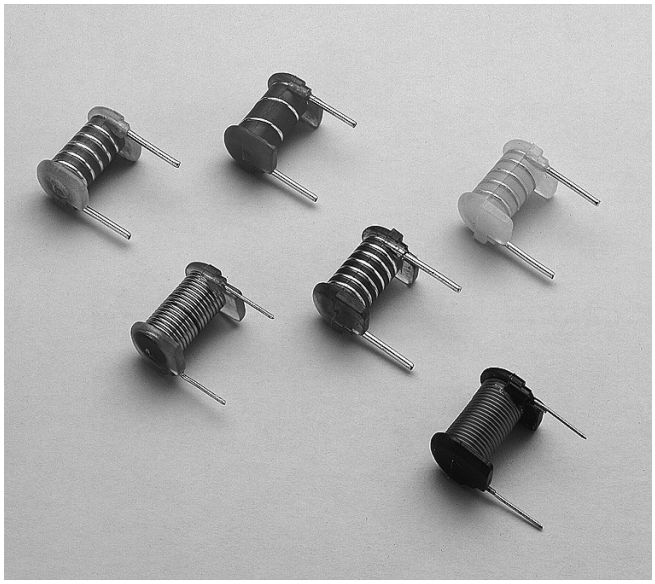

These fixed RF coils are part of Coilcraft's series of insert molded inductors. This precision construction technique ensures constant winding pitch, long-term stability and tight inductance tolerance (±5%).

These high Q fixed inductors are available in standard values from 14.0 nH to 709 nH.

Coilcraft Designer's Kit M304 contains three samples of each value plus 13 values from the 148 Series. To order, please contact Coilcraft or visit **http://order.coilcraft.com**.

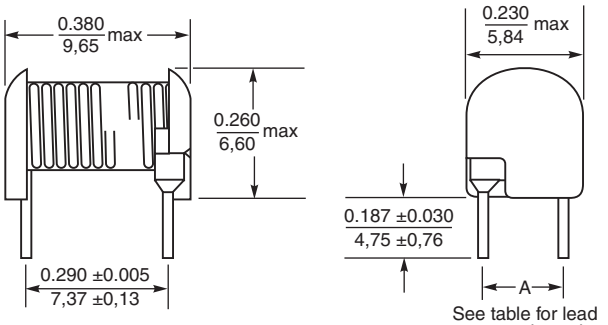

See table for lead gauge and spacing

Weight: 245– 510 mg
Packaging: 60 parts per tube

Part number	L ±5%[2] (nH)	Q min[2]	Test freq (MHz)	SRF min[3] (MHz)	DCR max[4] (mOhms)	Irms[5] (A)	Color	Turns	Lead gauge (AWG)	Dim A[6] (in/mm)	L ±5%[7] (nH)
132-01L	14.0	60	50	2500	2.1	4.0	Brown	1½	22	0.148/3,76	31.5
132-02L	21.0	64	50	2000	3.0	4.0	Red	2½	22	0.148/3,76	36.5
132-03L	28.0	68	50	1700	3.8	4.0	Orange	3½	22	0.148/3,76	44.0
132-04L	37.5	72	50	1550	4.7	4.0	Yellow	4½	22	0.148/3,76	53.5
132-05L	49.0	75	50	1240	5.7	4.0	Green	5½	22	0.148/3,76	64.0
132-06L	61.5	80	50	1160	6.6	4.0	Blue	6½	22	0.148/3,76	79.0
132-07L	83	66	25	900	7.4	3.5	Violet	7½	22	0.148/3,76	99.0
132-08L	98	68	25	800	8.0	3.5	Gray	8½	22	0.148/3,76	117
132-09L	120	68	25	700	9.0	3.5	White	9½	22	0.148/3,76	138
132-10L	140	68	25	615	10.0	3.0	Black	10½	22	0.148/3,76	158
132-11L	180	66	25	525	13.7	3.0	Brown	11½	23	0.148/3,76	197
132-12L	220	72	25	480	19.0	3.0	Red	12½	24	0.153/3,89	235
132-13L	246	70	25	440	20.3	3.0	Orange	13½	24	0.153/3,89	260
132-14L	276	70	25	410	22.5	3.0	Yellow	14½	24	0.153/3,89	290
132-15L	333	72	25	390	30.6	3.0	Green	15½	25	0.154/3,91	345
132-16L	397	72	25	365	40.3	2.5	Blue	16½	26	0.156/3,96	410
132-17L	460	66	25	340	43.1	2.5	Violet	17½	26	0.156/3,96	475
132-18L	505	66	25	325	57.3	2.0	Gray	18½	27	0.156/3,96	550
132-19L	571	68	25	310	61.2	2.0	White	19½	27	0.156/3,96	600
132-20L	709	66	25	275	82.7	1.5	Black	20½	28	0.160/4,06	720

1. When ordering, please specify **termination** code:

   132-20L

   Termination: L = RoHS compliant tin-silver over copper.
   Special order: S = non-RoHS tin-lead (63/37).
2. Inductance and Q measured at test frequency with leads connected directly to the Agilent/HP 4287A.
3. SRF measured using the Agilent/HP 8753D.
4. DCR measured using a Cambridge Technology Model 510 Micro Ohmmeter or equivalent.
5. Current that causes a 20°C temperature rise from 25°C ambient.
6. Tolerance ±0.005″/0,13 mm.
7. The inductance values in column two are more accurate measurements taken on a contemporary meter. The old values in this column are for reference by existing users of these parts and were measured with leads connected directly to a Boonton 260-A.
8. Operating temperature range –40°C to 85°C.
9. Electrical specifications at 25°C.

COILCRAFT PRECISION ACCURATE REPEATABLE MEASUREMENTS
SEE WEB SITE TEST FIXTURES

Coilcraft®
www.coilcraft.com

US +1-847-639-6400 sales@coilcraft.com
UK +44-1236-730595 sales@coilcraft-europe.com
Taiwan +886-2-2264 3646 sales@coilcraft.com.tw
China +86-21-6218 8074 sales@coilcraft.com.cn
Singapore + 65-6484 8412 sales@coilcraft.com.sg

© Coilcraft Inc. 2013
This product may not be used in medical or high risk applications without prior Coilcraft approval. Specification subject to change without notice. Please check web site for latest information.